DynaLabs

Model DYN-MS-100
100 N MS Shaker
Product Manual

All rights reserved. Reproduction or issue to third parties in any form whatsoever is not permitted without written authority from the proprietors.

Product Support

If at any time you have questions or problems with the DYN-MS-100 shaker, please contact a Dynalabs engineer at:

Phone: +90 312 266 33 34 (9 a.m. to 5 p.m., UTC +3)

E-mail: info@dynalabs.com.tr

Warranty

Our products are warranted against defective materials and workmanship for one year. Defects arising from user errors are not covered by the warranty.

Copyright

All copyrights of this manual belonging to Dynalabs products are reserved. It cannot be reproduced without written consent.

Disclaimer

Dynalabs Ltd. provides this publication "as is" without warranty of any kind, express or implied, including but not limited to, the implied warranties of merchantability or fitness for a particular purpose. This document is subject to change without notice, and should not be construed as a commitment or representation by Dynalabs Ltd.

This publication may contain inaccuracies or typographical errors. Dynalabs Ltd. will periodically update the material for inclusion in new editions. Changes and improvements to the product described in this manual may be made at any time.

All rights reserved. Reproduction or issue to third parties in any form whatsoever is not permitted without written authority from the proprietors.

Table of Contents

1) Introduction 4
2) General Information 4
2.1) Unpacking and Inspection 4
2.2) System Components 4
2.3) Theory of Operation 4
2.4) Specifications 6
2.5) Outline Drawing 7
3) Operation and Installation 8
3.1) General 8
3.1.1) External Signal Mode 8
3.1.2) Internal Signal Mode 9
3.2) Shaker-Structure Interaction (Stingers) 10
3.3) Shaker Alignment 10
3.4) Shaker Mounting 11
3.5) Power Requirements 11
3.6) Cooling 11
3.7) Frequency Response 11
4) Maintenance and Troubleshooting 12
5) Safety 12
5.1) Grounding 12
6) Declaration of Conformity 13

All rights reserved. Reproduction or issue to third parties in any form whatsoever is not permitted without written authority from the proprietors.

1) Introduction

The DYN-MS-100 is designed to provide dynamic force excitation for vibration and shock testing of small sized mechanical structures.

The DYN-MS-100 is a compact, lightweight and powerful general purpose electrodynamic shaker with an integrated amplifier providing up to 100 N peak sine force.

2) General Information

2.1) Unpacking and Inspection

Dynalabs products provide adequate protection for undamaged products to be transported. Document the damages that occur indirectly during the transport and contact the customer representative. Check all components of the shaker. If there is a defect, please contact us.

2.2) System Components

The DYN-MS-100 has the following components:

-Electrodynamic Shaker

-Power Adapter

-Signal Cable

-Stinger Set

-R 1/4 Pneumatic Union

- User Manual

2.3) Theory of Operation

DYN-MS-100 is an electro-magnetic actuator. Electro-magnetic actuators are basically voice coils consisting of a permanent magnet and coil. The moving element can be the coil or the magnet depending on the design requirements. The moving element is usually suspended by an elastic membrane.

All rights reserved. Reproduction or issue to third parties in any form whatsoever is not permitted without written authority from the proprietors.

DYN-MS-100 has a moving coil (driving coil) whose current is controlled for vibration generation. The stationary magnetic field is produced by a permanent magnet.

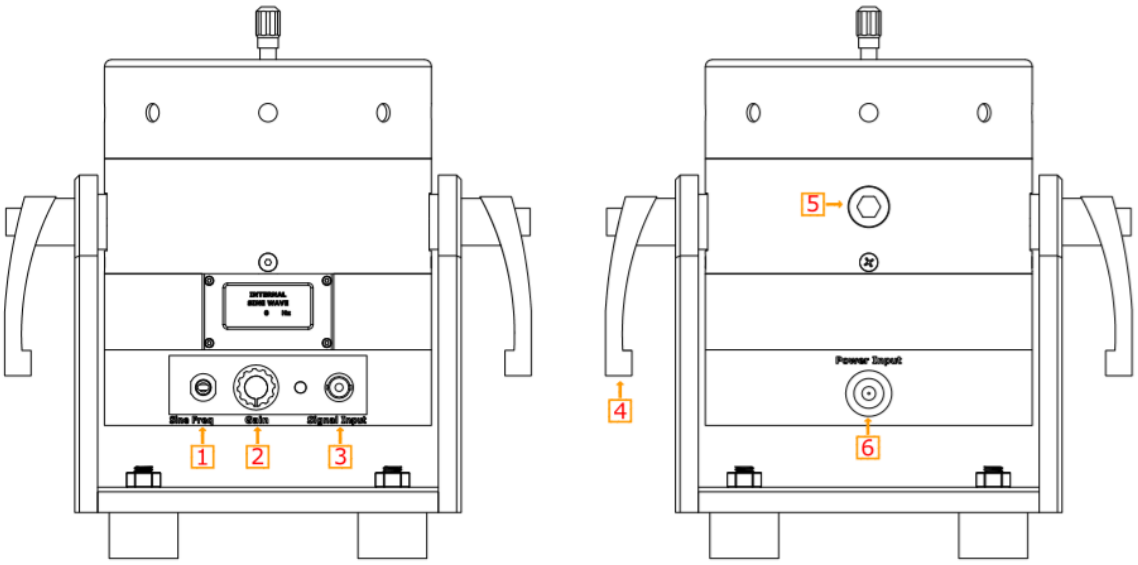

Item	Description
1	Sine Frequency Generator
2	Gain Knob
3	External Signal Input
4	Trunnion handle
5	Cooling port
6	DC Power Input

All rights reserved. Reproduction or issue to third parties in any form whatsoever is not permitted without written authority from the proprietors.

2.4) Specifications

Parameters	Specifications
Output Force (Sinus)	100 N
Frequency	0-7.5 kHz
Displacement (Peak to Peak)	10 mm
Suspension	Carbon Fiber
Maximum Acceleration	60 g
Shaker Weight	7.2 kg
Cooling System	Natural Convection (For continuous operation at 100N forced cooling is suggested)
Operating Temperature Range	5-35 °C
Maximum Input Current	6A (RMS)
AMPLIFIER	**INTERNAL**
External Signal Voltage Level	1 VAC (PEAK)
Power Supply Voltage	24V DC
Power Supply Current	5 A

All rights reserved. Reproduction or issue to third parties in any form whatsoever is not permitted without written authority from the proprietors.

2.5) Outline Drawing

The dimensional properties of DYN-MS-100 shakers are given below.

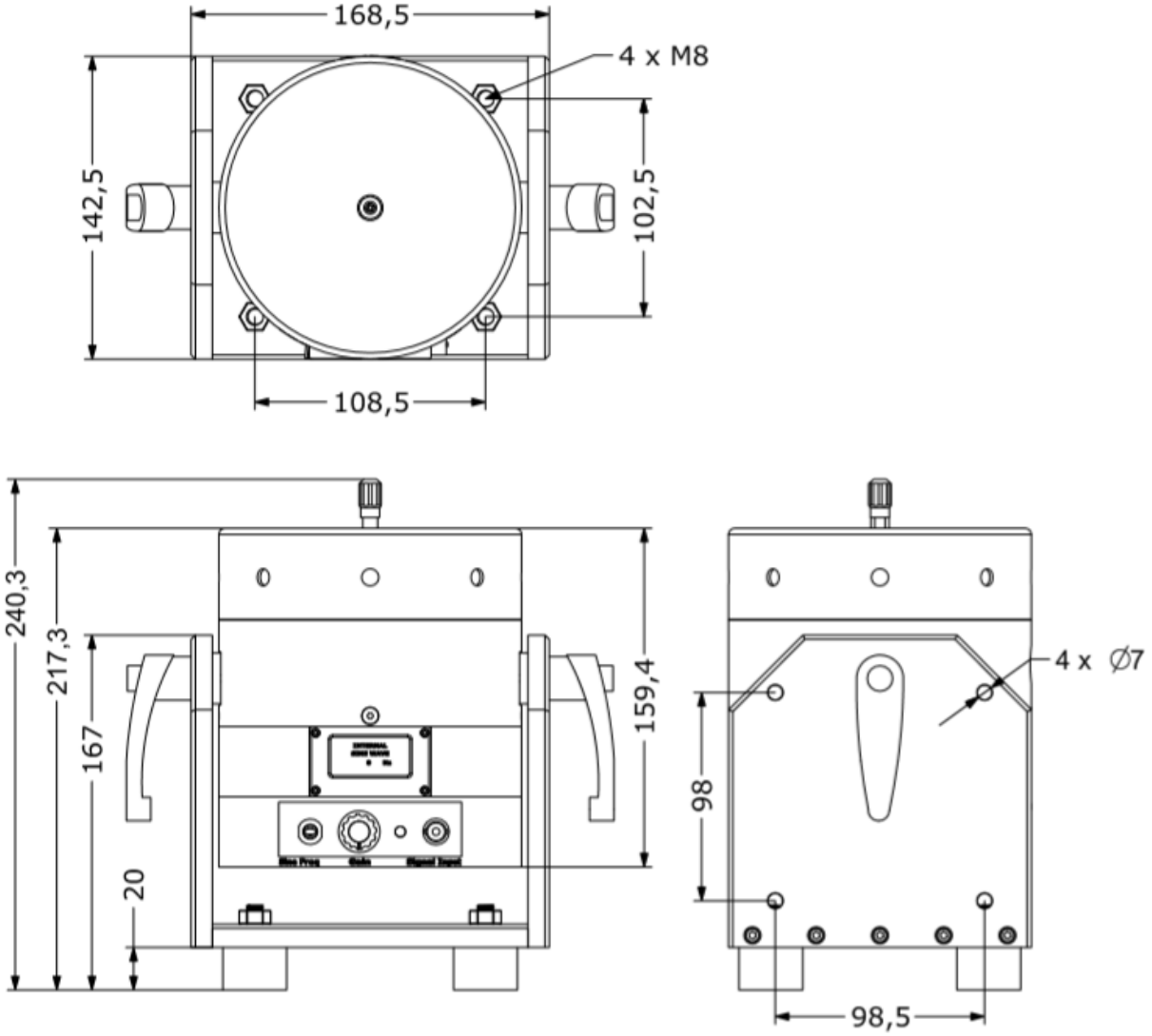

All rights reserved. Reproduction or issue to third parties in any form whatsoever is not permitted without written authority from the proprietors.

3) Operation and Installation

3.1) General

The general shaker connector configuration is given below.

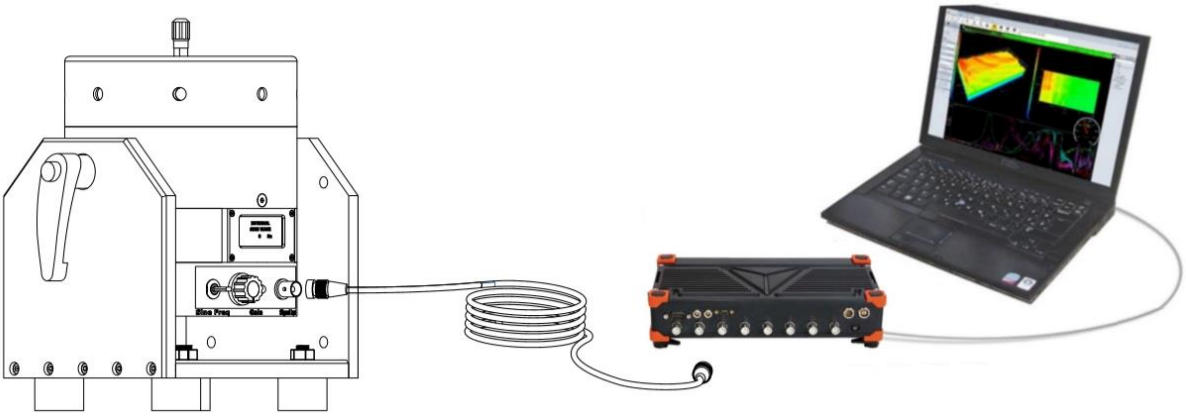

3.1.1) External Signal Mode

Connect DC power source and drive signal to shaker power input and signal input respectively. Start the external signal source. Adjust the Gain of the amplifier by turning the Gain Knob clockwise.

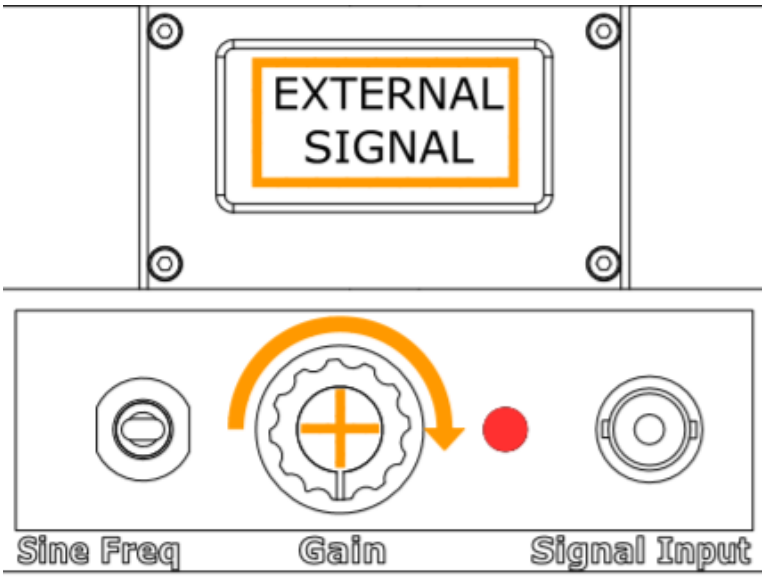

All rights reserved. Reproduction or issue to third parties in any form whatsoever is not permitted without written authority from the proprietors.

3.1.2) Internal Signal Mode

The amplifier can generate sine signal from 1Hz to 15 kHz with 1 Hz increments that the user can adjust with the Sine Frequency Generator Switch. Connect DC power source and drive signal to shaker power input. Pull the Gain Knob out.

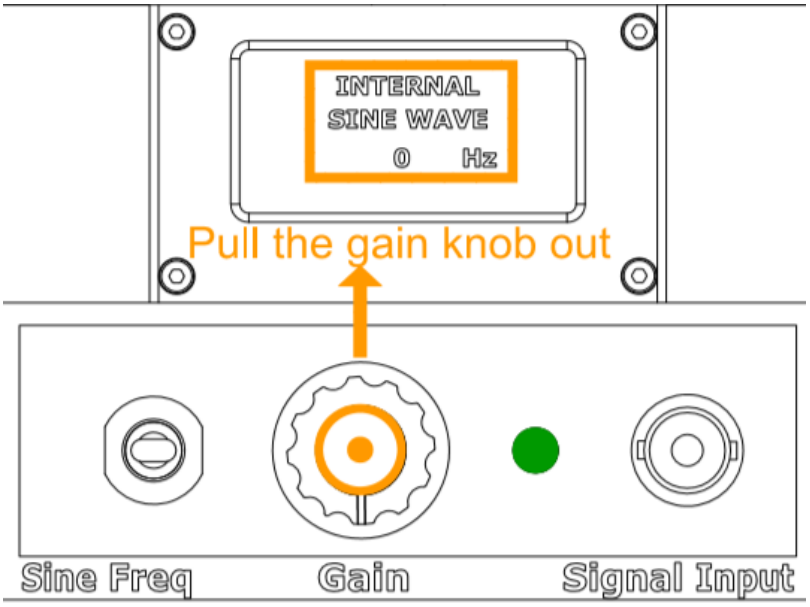

Raise or lower the Sine Frequency Generator Switch to the desired Sine frequency. Adjust the Gain of the amplifier by turning the Gain Knob clockwise. The frequency of the generated sine signal will be visible on the LCD Screen.

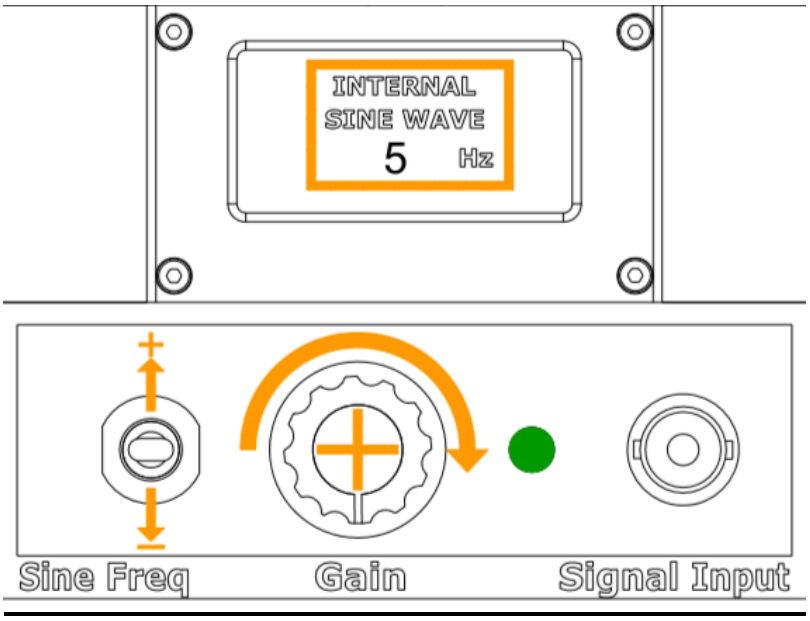

All rights reserved. Reproduction or issue to third parties in any form whatsoever is not permitted without written authority from the proprietors.

3.2) Shaker-Structure Interaction (Stingers)

Stingers used in modal shakers are thin rods with a specific length yielding low lateral and high axial stiffness. The high axial stiffness is necessary to transmit the shaker force directly to the test structure with high efficiency whereas the low lateral stiffness is necessary for protecting the shaker from moment loads and to minimize shaker alignment issues. The stingers are mounted on the shaker via a chuck. Force or impedance head sensors can be mounted on the other side. The Dynalabs modal shakers stinger sets include 4 collet, 1 nut and 3 stinger rod sizes .The chuck consists of two pieces. The collet squeezes the stinger with the tightening effect of the nut. Choose a collet size as close to your stinger diameter as possible.

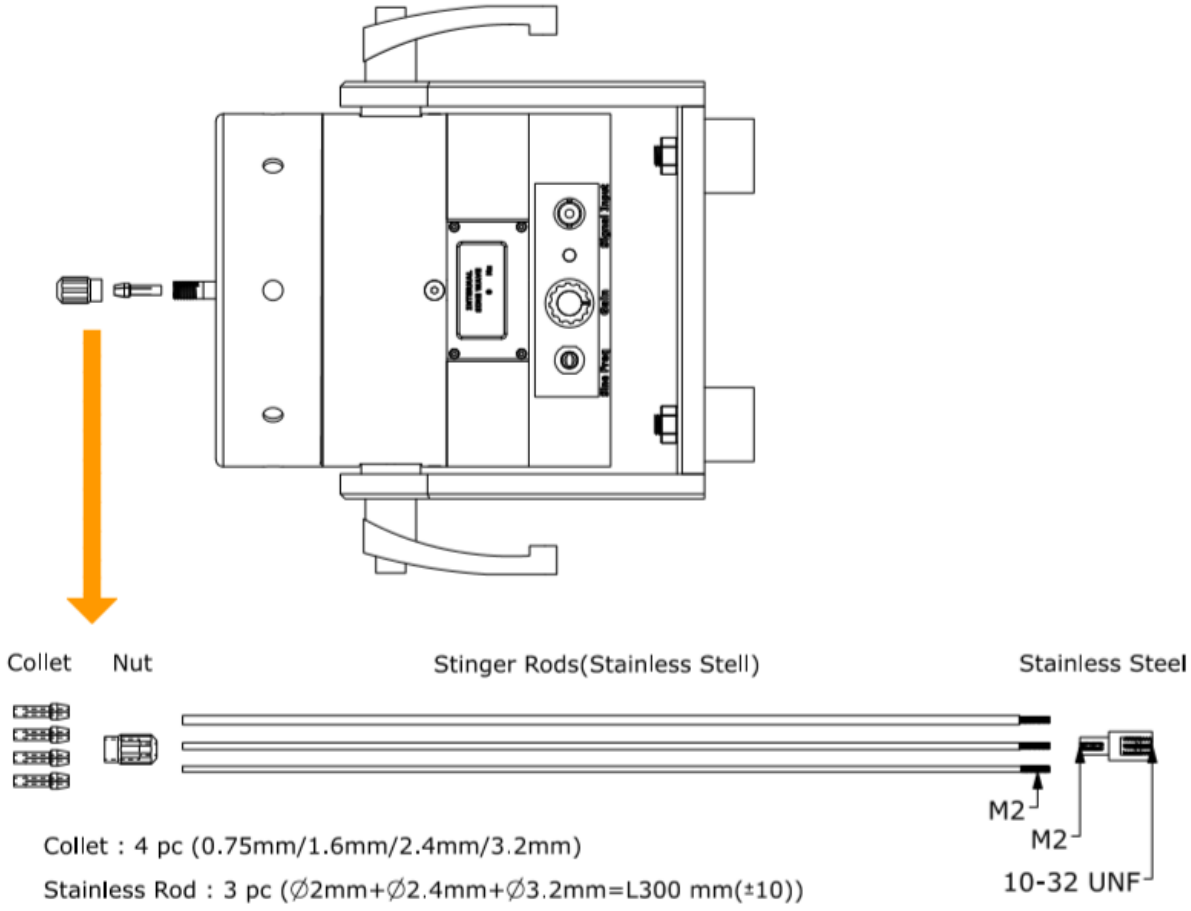

3.3) Shaker Alignment

Shaker alignment is a very important step of modal testing. Poor alignment can cause force components in unmeasured directions and can even damage the shaker. In order to overcome this problem, the trunnion can be adjusted for proper alignment. Furthermore, the tip of the stinger can be removed during the alignment process in order to reduce the free end deflection as shown above.

All rights reserved. Reproduction or issue to third parties in any form whatsoever is not permitted without written authority from the proprietors.

3.4) Shaker Mounting

The shaker is designed to rest on its rubber isolators. However, these isolators can be removed for rigid or semi-rigid mounting. If it is not possible to bolt down the shaker, hot glue is also a good mounting option.

The shaker can also be suspended by elastic bungee cords for lateral testing. Additional inertial weight may be attached to the bottom of the shaker using hot glue.

3.5) Power Requirements

DYN-MS-100 has an integrated power amplifier which is powered by its power adaptor. Please note the output voltage and current ratings of the adaptor in a replacement adaptor is to be used.

3.6) Cooling

DYN-MS-100 does not require forced cooling. Air convection cooling is sufficient for the force levels given in the specifications.

3.7) Frequency Response

The following figure shows the Input voltage normalized acceleration levels versus frequency of the shaker

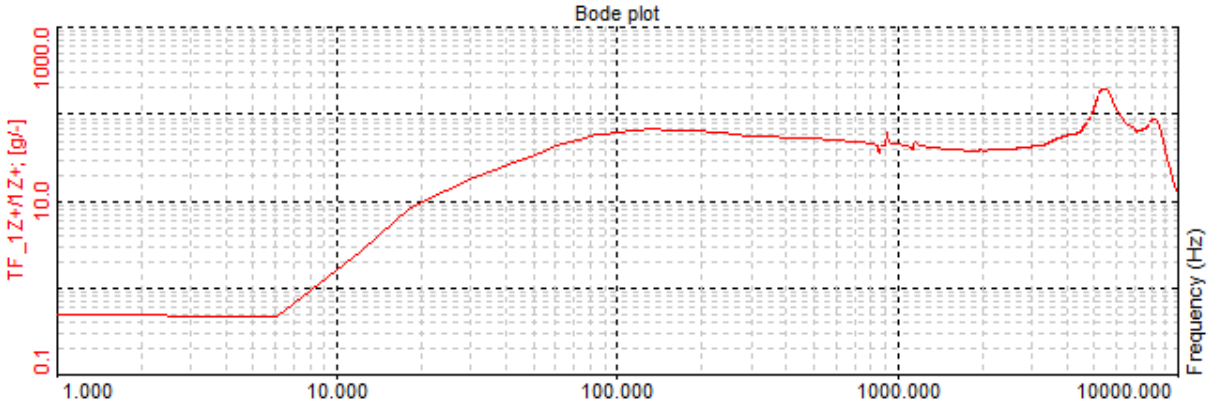

All rights reserved. Reproduction or issue to third parties in any form whatsoever is not permitted without written authority from the proprietors.

4) Maintenance and Troubleshooting

The DYN-MS-100 shaker is a sealed device requiring no maintenance if the operating instructions described in this manual are followed. Repair of damage to the coil, exciter body or magnet core should not be attempted. Please return the shaker to Dynalabs for proper repair.

5) Safety

Please ensure that this manual section is reviewed and understood prior to installation, operation or maintenance of the equipment. The danger of electrical shock or fire always exists in electrical equipment.

The DYN-MS-100 Shaker is designed for safe operation. Safety features such as electrical insulation on outer surfaces are provided for the safe operation of the shaker system.

5.1) Grounding

The shaker is internally grounded via the power adapter. However, if further grounding is necessary a grounding socket is available on the shaker as shown. Appropiate grounding cable is also supplied with the shaker.

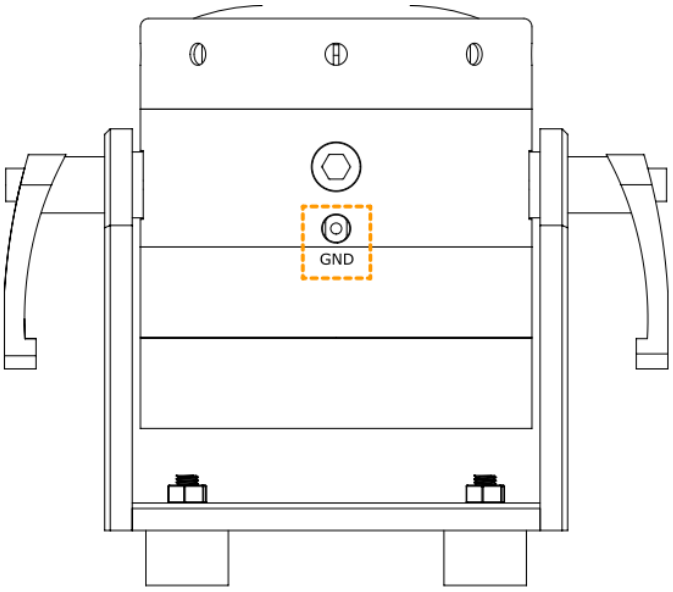

All rights reserved. Reproduction or issue to third parties in any form whatsoever is not permitted without written authority from the proprietors.

6) Declaration of Conformity

DynaLabs CE

This declaration of conformity is issued under the sole responsibility of the manufacturer. The product(s) are developed, produced and tested according to following EC- directives:

- 2014/35/EU – Low Voltage Directive (LVD)
- 2006/42/EU – Machinery Safety Directive
- 2015/863/EU – RoHS Directive

Applied standards:

• EN 61010-1:2010

• EN ISO 12100:2010

• MIL-STD-810-H-2019 (Test Methods: 501.7 - High Temperature, 502.7 - Low Temperature, 514.8 - Vibration, 516.8 – Shock)

DYNALABS MÜHENDİSLİK SANAYİ TİCARET LİMİTED ŞİRKETİ declares that above mentioned products meet all the requirements of the above mentioned standards and regulations.

Murat Aykan, Technical Manager

Ankara, 15.07.2021